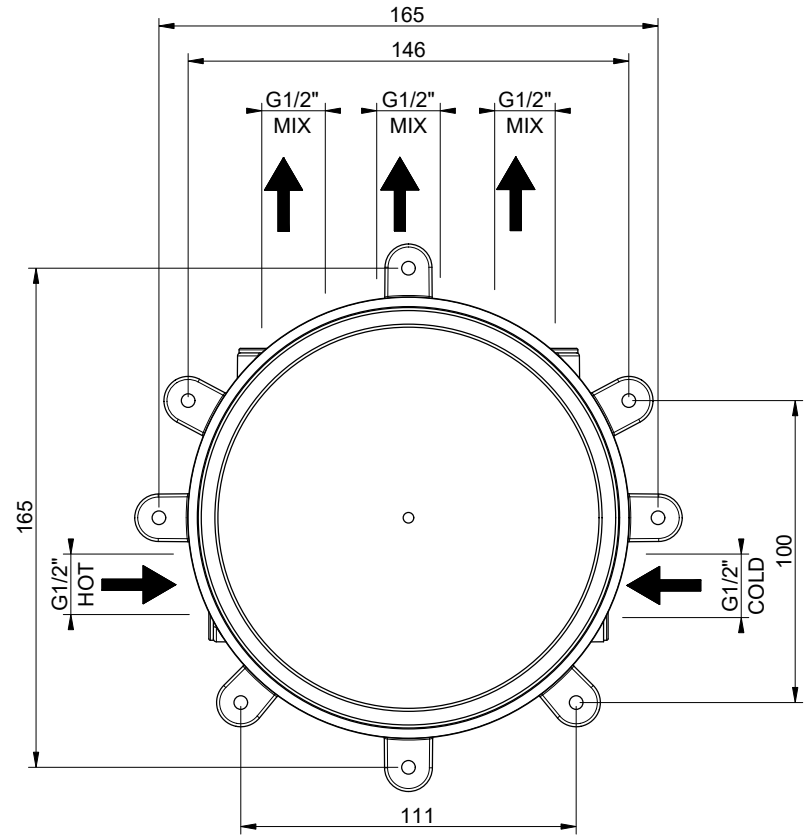


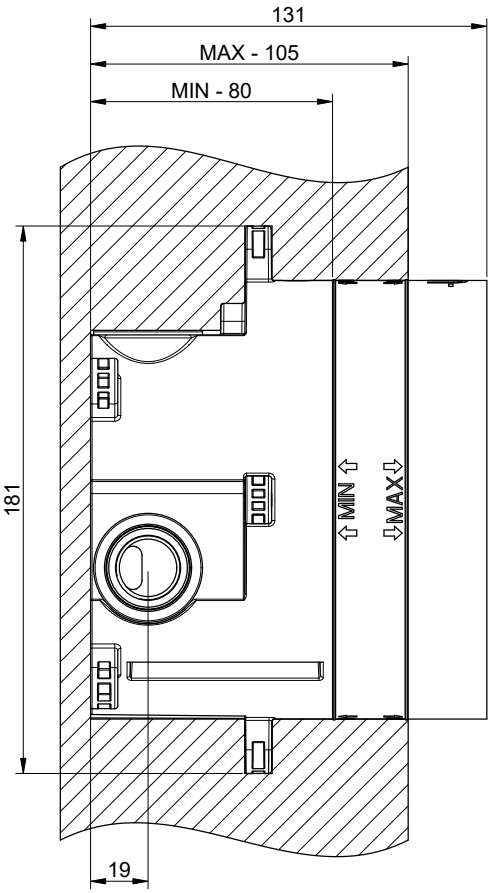


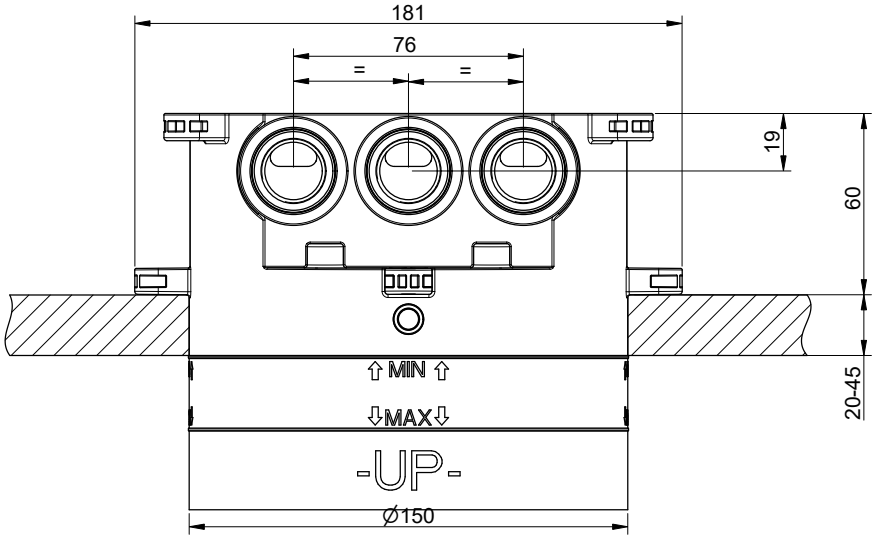


| | | |
|---|---|---|
| GESSI | **HI-FI 38268** | Formato *A4* |
| | PARTE INCASSO DOCCIA TRE VIE A PULSANTI | Dis.: GPF3826800000G000 |

Gessi S.p.A.Parco Gessi,13037 Serravalle Sesia (Vercelli) Italy Tel.0039 0163 454111 Fax.0039 0163 453150 www.gessi.com e-mail:gessi@gessi.it

*This drawing by its legislation cannot be disclosed or reproduced without a written authorization released by GESSI S.p.A. - 2023 Copyright© GESSI S.p.A.*