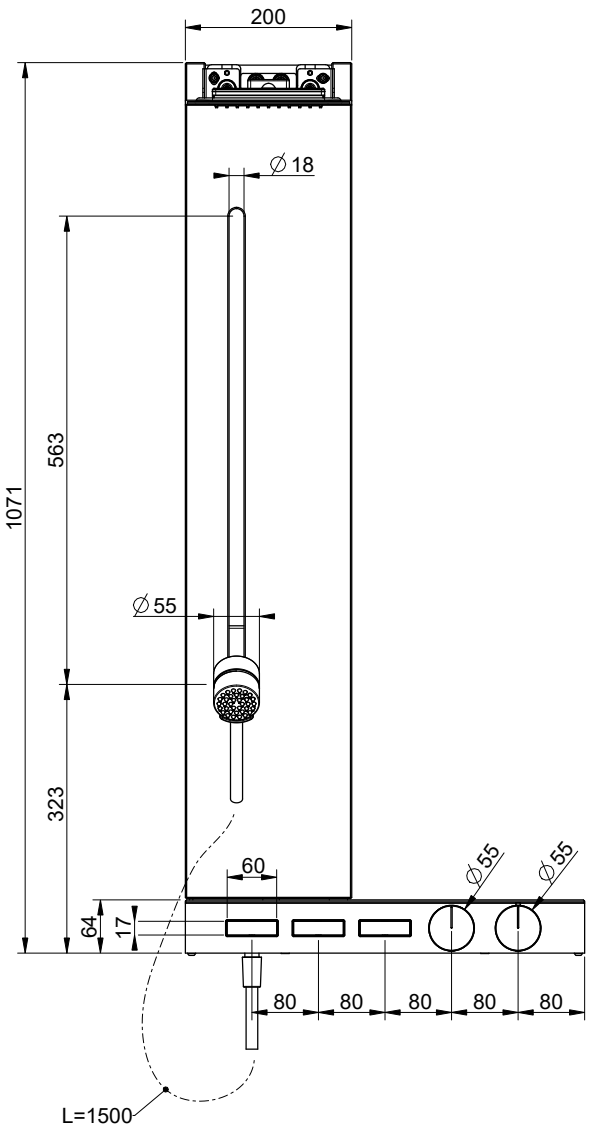

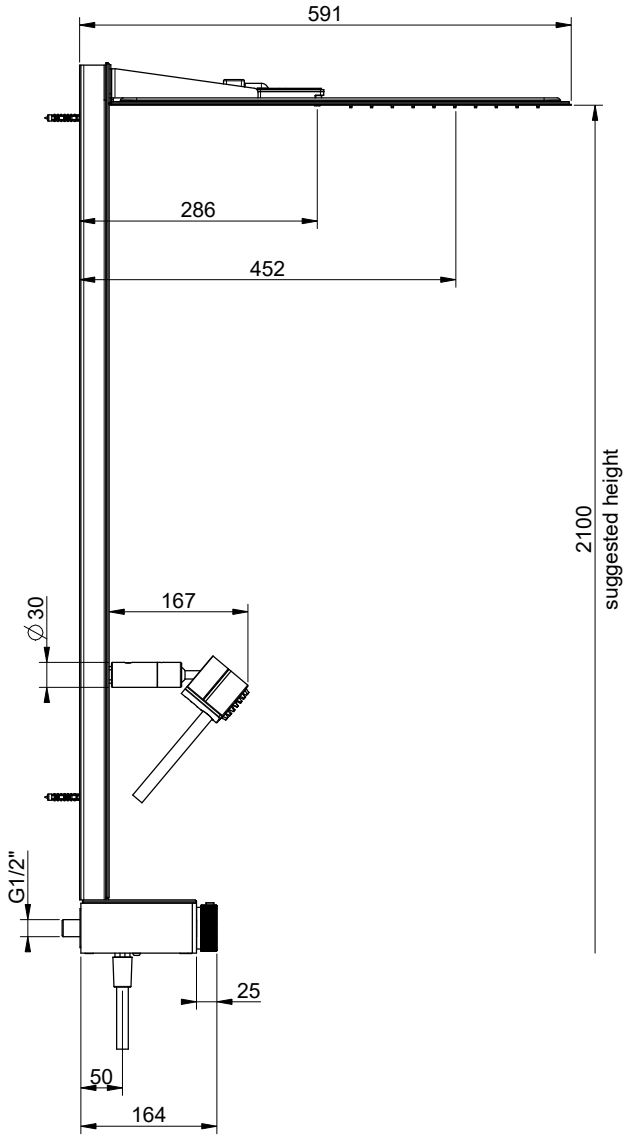

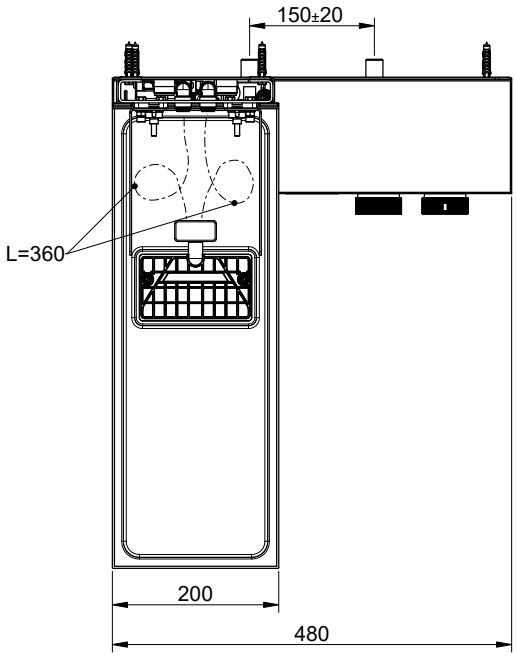

GESSI	**HI-FI 63041**	Formato *A4*	
	COLONNA DOCCIA TERM A PULSANTI 3 VIE	Dis.: GPF6304100000G000	

Gessi S.p.A.Parco Gessi,13037 Serravalle Sesia (Vercelli) Italy Tel.0039 0163 454111 Fax.0039 0163 453150 www.gessi.com e-mail:gessi@gessi.it

This drawing by its legislation cannot be disclosed or reproduced without a written authorization released by GESSI S.p.A. - 2019 Copyright© GESSI S.p.A.